DIVISION OF HIGHWAYS
STATE OF NORTH CAROLINA

PROJECT REFERENCE NO.	SHEET NO.
17BP.10.R.40	3
R/W SHEET NO.	

PAVEMENT DESIGN ENGINEER	ROADWAY DESIGN ENGINEER	HYDRAULICS ENGINEER
PAVEMENT DESIGN PROVIDED BY NCDOT	NORTH CAROLINA PROFESSIONAL SEAL 039234 ENGINEER NIKKI T. HONEYCUTT — 26OCT12	NORTH CAROLINA PROFESSIONAL SEAL 038053 ENGINEER DAVIN C. MORRISON — 10/26/12

STV / Ralph Whitehead Associates, Inc.
1000 West Morehead St., Ste. 200
Charlotte, NC 28208
NC License Number F-0991

EARTHWORK SUMMARY (IN CUBIC YARDS)

CHAIN	FROM STATION	TO STATION	SIDE	UNCL. EXCAVATION	UNDERCUT	EMBT+%	BORROW	WASTE
-L-	10+10.00	12+11.81	LT & RT	2		146	144	
SUBTOTAL SUMMARY NO. 1				2		146	144	
-L-	13+24.19	14+95.00	LT & RT	20		92	72	
SUBTOTAL SUMMARY NO. 2				20		92	72	
SUBTOTAL SUMMARY 1-2				22		239	216	
LOSS DUE TO CLEARING AND GRUBBING							208	
PROJECT TOTAL				22		239	216	
WASTE IN LIEU OF BORROW								
ESTIMATE 5% FOR TOPSOIL ON BORROW PITS							21	
GRAND TOTAL				22		239	445	
SAY				25			450	

NOTE: Earthwork quantities are calculated by the Roadway Design Unit. These earthwork quantities are based in part on subsurface data provided by the Geotechnical Engineering Unit.

Approximate quantities only. Unclassified Excavation, Borrow Excavation, Fine Grading, Clearing and Grubbing, Breaking of Existing Pavement, and Removal of Existing Pavement will be paid for at the contract lump sum price for "Grading."

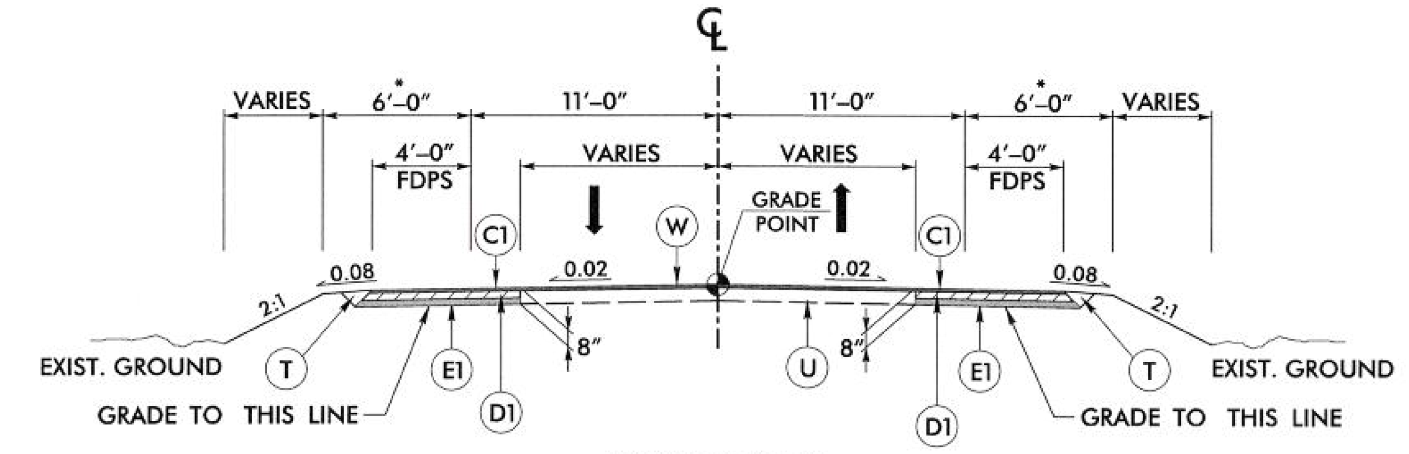

TYPICAL SECTION
-L- STA. 10+10.00 TO 12+11.81 (BEGIN BRIDGE)
-L- STA. 13+24.19 (END BRIDGE) TO 14+95.00

* 9'-0" WITH GUARDRAIL
** ALL PAVEMENT SLOPES ARE 1:1 UNLESS SHOWN OTHERWISE.
*** SEE DETAIL A FOR SHOULDER BERM GUTTER LOCATION

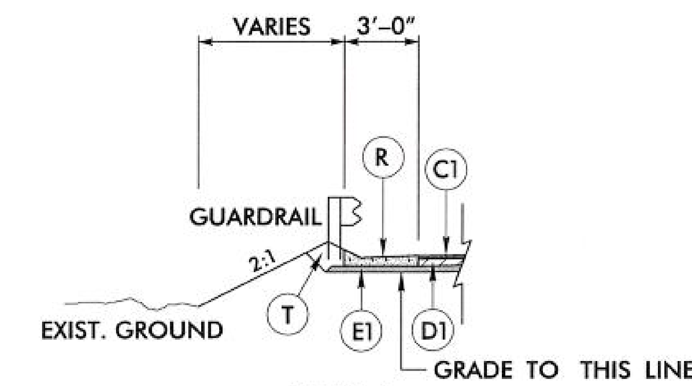

DETAIL A
-L- STA. 13+35.19 TO 13+69.54 (LT & RT)

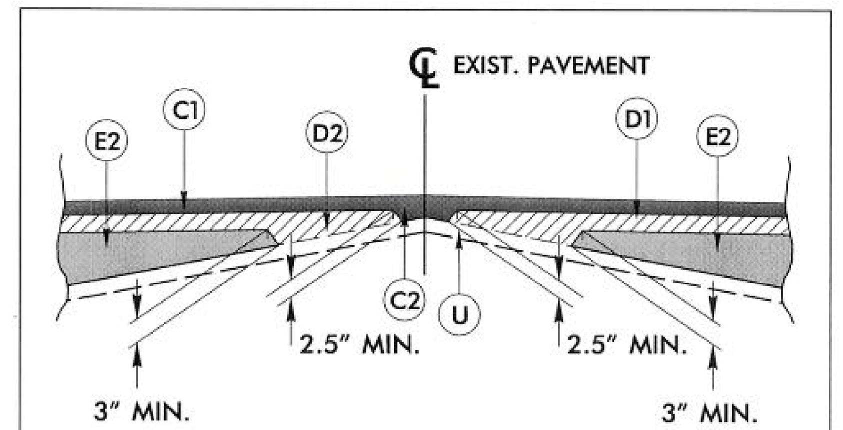

WEDGING DETAIL

	PAVEMENT SCHEDULE
C1	PROP. APPROX. 1.5" ASPHALT CONCRETE SURFACE COURSE, TYPE S9.5B, AT AN AVERAGE RATE OF 168 LBS. PER SQ. YD.
C2	PROP. VAR. DEPTH ASPHALT CONCRETE SURFACE COURSE, TYPE S9.5B, AT AN AVERAGE RATE OF 112 LBS. PER SQ. YD. PER 1" DEPTH. TO BE PLACED IN LAYERS NOT LESS THAN 1.5" IN DEPTH OR GREATER THAN 2.0" IN DEPTH.
D1	PROP. APPROX. 3.5" ASPHALT CONCRETE INTERMEDIATE COURSE, TYPE I19.0B, AT AN AVERAGE RATE OF 399 LBS. PER SQ. YD.
D2	PROP. VAR. DEPTH ASPHALT CONCRETE INTERMEDIATE COURSE, TYPE I19.0B, AT AN AVERAGE RATE OF 114 LBS. PER SQ. YD. PER 1" DEPTH. TO BE PLACED IN LAYERS NOT LESS THAN 2.5" IN DEPTH OR GREATER THAN 4" IN DEPTH.
E1	PROP. APPROX. 3" ASPHALT CONCRETE BASE COURSE, TYPE B25.0B, AT AN AVERAGE RATE OF 342 LBS. PER SQ. YD.
E2	PROP. VAR. DEPTH ASPHALT CONCRETE BASE COURSE, TYPE B25.0B, AT AN AVERAGE RATE OF 114 LBS. PER SQ. YD. PER 1" DEPTH. TO BE PLACED IN LAYERS NOT LESS THAN 3.0" IN DEPTH OR GREATER THAN 5.5" IN DEPTH.
R	CONCRETE SHOULDER BERM GUTTER
T	EARTH MATERIAL
U	EXISTING PAVEMENT
W	PAVEMENT WEDGING

LIST OF PIPES, ENDWALLS, ETC. (FOR PIPES 48 INCHES & UNDER)

STATION / SIZE / THICKNESS OR GAUGE	LOCATION (LT, RT, OR CL)	STRUCTURE NO. FROM	STRUCTURE NO. TO	TOP ELEVATION	INVERT ELEVATION	INVERT ELEVATION	SLOPE CRITICAL
-L- 13+49.35	LT	1		592.00			
		IN	OUT		587.30	586.40	6.00
-L- 13+49.35	RT	2		592.00			
		IN	OUT		588.91	588.25	6.00
SHEET TOTALS							

STATION	SIDE DRAIN PIPE (RCP, CSP, CAAP, HDPE, or PVC) 12"	15"	18"	24"	30"	36"	42"	48"	DO NOT USE RCP	DO NOT USE CSP	DO NOT USE CAAP	DO NOT USE HDPE
-L- 13+49.35												
-L- 13+49.35												
SHEET TOTALS												

STATION	C.S. PIPE 12" .064	15" .064	18" .064	24" .064	30" .079	36" .079	42" .109	48" .109
-L- 13+49.35								
-L- 13+49.35								
SHEET TOTALS								

STATION	R.C. PIPE CLASS III 12"	15"	18"	24"	30"	36"	42"	48"	R.C. PIPE CLASS IV 12"	15"	18"	24"	30"	36"	42"	48"
-L- 13+49.35																
		15														
-L- 13+49.35																
		11														
SHEET TOTALS		26														

STATION	**" R.C. PIPE (CLASS V)	***" RC PIPE CULVERTS, CONTRACTOR DESIGN	***" RC PIPE CULVERTS, CONTRACTOR DESIGN	15" SIDE DRAIN PIPE	18" SIDE DRAIN PIPE	ENDWALLS STD. 838.01 OR STD. 838.11 (UNLESS NOTED OTHERWISE) CU. YARDS R.C.P.	C.S.P.	QUANTITIES FOR DRAINAGE STRUCTURES PER EACH (0' THRU 5.0')	*TOTAL L.F. FOR PAY QUANTITY SHALL BE COL. 'A' + (1.3 X COL.'B') LIN. FT. A 5.0' THRU 10.0'	B 10.0' AND ABOVE
-L- 13+49.35										
								1		
-L- 13+49.35										
								1		
SHEET TOTALS								2		

STATION	C.B. STD. 840.01 OR STD. 840.02	FRAME, GRATES, AND HOOD STANDARD 840.03 TYPE OF GRATE E	F	G	CONCRETE TRANSITIONAL SECTION DROP INLET	CATCH BASIN	D.I. STD. 840.14 OR STD. 840.15	D.I. FRAME AND GRATE STD. 840.16	G.D.I. TYPE "A" STD. 840.17 OR 840.26	G.D.I. TYPE "B" STD. 840.18 OR 840.27	G.D.I. TYPE "D" STD. 840.19 OR 840.28	TRAFFIC BEARING G.D.I. STD. 840.35	G.D.I. FRAME WITH GRATE STD. 840.20	G.D.I. FRAME WITH TWO GRATES STD. 840.22	G.D.I. (N.S.) FRAME WITH GRATE STD. 840.24	G.D.I. (N.S.) FRAME WITH TWO GRATES STD. 840.29	J.B. STD. 840.31 OR 840.32				SIDE DRAIN PIPE ELBOWS NO. & SIZE	CONC. & BRICK PIPE PLUG, C.Y. STD. 840.71	CONC. COLLARS CL. "B" C.Y. STD. 840.72	PIPE REMOVAL LIN. FT.	REMARKS
-L- 13+49.35																									
												1				1									
-L- 13+49.35																									
												1				1									
SHEET TOTALS												2				2									

ABBREVIATIONS

C.B.	CATCH BASIN
N.D.I.	NARROW DROP INLET
D.I.	DROP INLET
G.D.I.	GRATED DROP INLET
G.D.I.(N.S.)	(NARROW SLOT)
J.B.	JUNCTION BOX
M.H.	MANHOLE
T.B.D.I.	TRAFFIC BEARING DROP INLET
T.B.J.B.	TRAFFIC BEARING JUNCTION BOX

* W MEASURED FROM "N" AT THE BEGINNING OF THE ANCHOR TO "N" AT THE END OF THE ANCHOR.
"N" = DISTANCE FROM EDGE OF LANE TO FACE OF GUARDRAIL.
TOTAL SHOULDER WIDTH = DISTANCE FROM EDGE OF TRAVEL LANE TO SHOULDER BREAK POINT.
FLARE LENGTH = DISTANCE FROM LAST SECTION OF PARALLEL GUARDRAIL TO END OF GUARDRAIL.
W = TOTAL WIDTH OF FLARE FROM BEGINNING OF TAPER TO END OF GUARDRAIL.
G = GATING IMPACT ATTENUATOR TYPE 350
NG = NON-GATING IMPACT ATTENUATOR TYPE 350

GUARDRAIL SUMMARY

SURVEY LINE	BEG. STA.	END STA.	LOCATION	LENGTH STRAIGHT	LENGTH SHOP CURVED	LENGTH DOUBLE FACED	WARRANT POINT APPROACH END	WARRANT POINT TRAILING END	"N" DIST. FROM E.O.L.	TOTAL SHOUL. WIDTH	FLARE LENGTH APPROACH END	FLARE LENGTH TRAILING END	W* APPROACH END	W* TRAILING END	ANCHORS XI MOD	B-77	GRAU 350	M-350	TYPE III	CAT-1	VI MOD	BIC	AT-1	IMPACT ATTENUATOR TYPE 350 EA	G	NG	SINGLE FACED GUARDRAIL	REMOVE EXISTING GUARDRAIL	REMOVE AND STOCKPILE EXISTING GUARDRAIL	REMARKS
-L-	11+30.56	12+11.81	RT	81.25			12+11.81		4.4 - 5.4	7.41	50.0'		1.0'				1		1											
-L-	11+30.56	12+11.81	LT	81.25				12+11.81	4.4 - 5.4	7.41		50.0'		1.0'			1		1											
-L-	13+24.19	14+05.44	RT	81.25				13+24.19	4.4 - 5.4	7.41		50.0'		1.0'			1		1											
-L-	13+24.19	14+05.44	LT	81.25			13+24.19		4.4 - 5.4	7.41	50.0'		1.0'				1		1											
			TOTAL:	325.00													4		4											
			TOTAL ANCHOR LENGTH:	275.00																										
			TOTAL GUARDRAIL LENGTH:	50.00																										
			SAY:	50.00																										

R:\Roadway\Proj\N0R40_rdy_psh03.dgn
10/26/2012